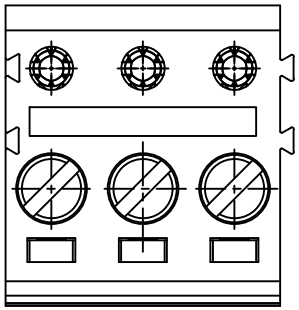

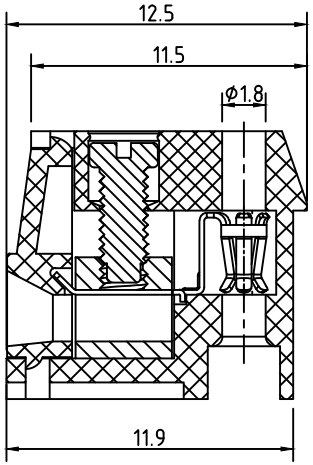

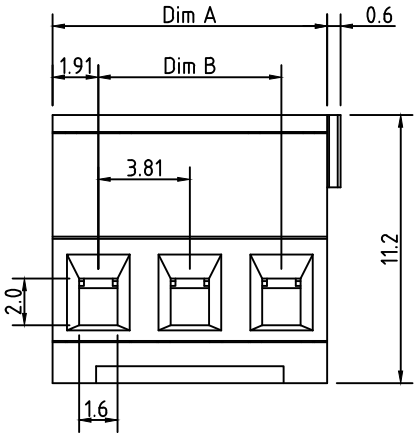

N=Number of contacts

SPECIFICATIONS

Voltage Rating:	300VAC
Current Rating:	10 Amps
Dielectric withstanding:	1.6KV
Operating Temperature:	−40°C to +115°C
Contact Material:	PhBz, Tin Plated
Terminal Screw:	Steel Zinc plating "−" slot type
Insulator Material:	Thermoplastic, UL 94V−0
Wire Range:	
Wire Strip Length:	5−6mm
Solid/Stranded Wire:	16−28 AWG
Torque:	1.7Lb−In
Clamp:	Brass(CuZn) Ni plated
Screw:	M2
Safety Approval:	c us

RPGG- xx D A x J-FG

No. OF POLES
02: 2 POLES
⋮
24: 24 POLES

FG: RoHS Compliant
Pb<40000ppm

COLOR
J: Black(RAL9005)
B: Red(RAL3001/D)
C: Orange(RAL2011/P)
D: Yellow(RAL1018/A)
E: Green(RAL6018/T)
F: Blue(RAL5015/A)
H: Grey(RAL7035/D)

APTOS Technology CONFIDENTIAL
This document, and all information it contains, are the confidential, propriatary property of APTOS Technology. Disclosure, duplication or distribution of this document, or any information it contains, in whole or part, without prior written permission from APTOS Technology is strictly prohibited

Dimensions	
A	N×3.81
B	(N-1)×3.81

Poles	Tolerance
2P-6P	±0.15
7P-12P	±0.20
13P-18P	±0.30
19P-24P	±0.40

GENERAL TOLERANCE UNLESS OTHERWISE SPECIFIED					
XXX.	±	X	.XX	±	0.10
XX.	±	X	.XXX	±	X
X.	±	0.50	X.°	±	1°
.X	±	0.30	.X°	±	1°

REV.	C	DRAWN	02/03/06	RPGG Series 3.81 mm Removable Term. Block
DATE	02/03/06	CHECKED		
SCALE	As shown	APPROVED		PRODUCT NO. RPGG−XXDAXJ−FG
UNIT	mm		SIZE A4	FILE NAME: RPGG−XXDAXJ−FG LF APD.DWG

APTOS TECHNOLOGY